Low Flow Compressed Air Dryers

Complete compressed air dehumidification solutions

ENGINEERING YOUR SUCCESS.

Table of Contents

Compressed air dehumidification

Compressed Air Treatment Overview

Compressed Air: A Powerful Utility 3
Compressed Air and International Standards 4-5

Refrigerated Compressed Air Dryers

SPS Series Non-Cycling Refrigerated Dryers (10-250 scfm) 6-8

Desiccant Compressed Air Dryers

K-MT Series Heatless Desiccant Dryers (5-21 scfm) 9-12
CDAS Series Heatless Desiccant Dryers (32-177 scfm) 13-15
OFAS Series Heatless Oil-Free Desiccant Dryers (32-177 scfm) 16-18

Compressed Air

A powerful utility

Compressed air is safe and reliable power source that is widely used throughout industry. Often referred to as the fourth utility, compressed air is used by nearly every company for some aspect of their operations. While gas, water and electricity are supplied to site by a utility's supplier and to strict quality specifications, compressed air is generated on-site. This means that the quality of the compressed air and cost of producing it are the responsibility of the end user.

The problem with compressed air systems is that they inherently suffer from performance and reliability issues. Almost all the problems associated with the compressed air system and subsequent product related quality issues can be directly attributed to compressed air contamination. Operating an efficient product facility allows for higher volumes and better-quality products to be manufactured. To achieve maximum performance, the best compressed air quality is required.

Compressed air contaminants are derived from the atmospheric air, the air compressor, air storage tank(s) and the distribution piping.

From these sources, users should be aware of 10 major contaminants:

- Water vapor
- Water aerosols
- Liquid water
- Atmospheric direct
- Solid particles
- Microorganisms
- Oil vapor
- Oil aerosols
- Liquid oil
- Rust/pipe scale

Effectively removing or reducing these contaminants down to acceptable levels requires a combination of compressed air filtration and dehumidification equipment.

Compressed air quality requirements will differ from application to application, and so will the required combination of compressed air treatment products. Parker offers a wide range of compressed air treatment products that remove or reduce the amount of compressed air contamination down to acceptable levels when used in proper series.

Purification Technologies	Contaminants								
	Atmospheric particles	Rust and Pipescale	Micro-organisms	Liquid Water	Water Aerosols	Water Vapor	Liquid Oil	Oil Aerosols	Oil Vapor
Water Separator				●			●		
Coalescing Filter	●	●	●		●			●	
Refrigerated Dryer						●			
Desiccant (Adsorption) Dryer						●			
Adsorption Filter									●
Particulate Filter	●	●	●						
Sterile Air Filter			●						

Parker offers a wide range of compressed air treatment products that remove or reduce the amount of compressed air contamination down to acceptable levels when used in proper series.

ISO

International Standards Organization

ISO (International Standards Organization) is the world's largest developer and publisher of international standards. It is a network of the national standards institutes of 159 countries, one member per country, with a Central Secretariat in Geneva, Switzerland, that co-ordinates the system. ISO is a non-governmental organization that forms a bridge between the public and private sectors. On one hand, many of its member institutes are part of the governmental structure of their countries or are mandated by their government.

On the other hand, other members have their roots uniquely in the private sector, having been set up by national partnerships of industry associations.

Parker is a member of governing bodies such as BCAS (UK), CAGI (USA) and VDMA (Germany), which directly contribute to the development of international standards for compressed air quality and testing.

There are three standards currently in use which directly relate to compressed air quality (purity) and testing:

ISO8573 Series
ISO12500 Series
ISO7183

The most commonly used standard is the ISO8573 series and in particular:

ISO8573-1:2010

Use the chart below to determine which of the three standards to use based on your objective.

OBJECTIVE	STANDARD TO USE
TO SPECIFY THE PURITY OF COMPRESSED AIR REQUIRED AT A PARTICULAR POINT IN A COMPRESSED AIR SYSTEM	ISO8573-1:2010
TO TEST A COMPRESSED AIR SYSTEM FOR ONE OR MORE SPECIFIC CONTAMINANTS	ISO8573 PARTS 2 TO 9
TO VERIFY THE PERFORMANCE OF COMPRESSED AIR PURIFICATION EQUPMENT	FILTERS - ISO12500 SERIES DRYERS - ISO7183
TO BENCHMARK THE PERFORMANCE OF COMPRESSED AIR PURIFICATION EQUIPMENT	FILTERS - ISO12500 SERIES DRYERS - ISO7183

ISO8573

The compressed air quality standard

ISO8573 is the group of international standards relating to the quality (or purity) of compressed air. The standard consists of nine separate parts, with part 1 specifying the quality requirements of the compressed air and parts 2 – 9 specifying the methods of testing for a range of contaminants. ISO8573-1 is the primary document used from the ISO8573 series as it is this document which specifies the amount of contamination allowed in each cubic meter of compressed air.

ISO8573-1 lists the main contaminants as:

- Solid particulate
- Water
- Oil

The purity levels for each contaminant are shown separately in tabular form, however for ease of use, this document combines all three contaminants into one easy to use table. Each usage point in the system may require a different quality of compressed air dependent upon the application. Using the quality classification's shown in ISO8573-1:2010 will assist your equipment supplier to quickly and easily select the correct purification equipment necessary for each part of the system.

Parker has comprehensive ranges of purification equipment available to exactly match system requirements, ensuring both capital and operational costs are kept to a minimum.

Combined ISO8573-1 Table

ISO8573-1-2010 CLASS	Solid Particulate				Water		Oil
	Maximum number of particulats per m^3			Mass Concentration mg/m^3	Vapor Pressure Dewpoint	Liquid g/m3	Total Oil (aerosol liqid & vapor)
	0.1-0.5 micron	0.5-1 micron	1-5 micron				mg/m^3
0	As specified by the equipment user or supplier and more stringent than Class 1						
1	≤ 20,000	≤ 400	≤ 10	—	≤ -70°C	—	0.01
2	≤ 400,000	≤ 6,000	≤ 100	—	≤ -40°C	—	0.1
3	—	≤ 90,000	≤ 1,000	—	≤ -20°C	—	1
4	—	—	≤ 10,000	—	≤ +3°C	—	5
5	—	—	≤ 100,000	—	≤ +7°C	—	—
6	—	—	—	≤ 5	≤ +10°C	—	—
7	—	—	—	5 - 10	—	≤ 0.5	—
8	—	—	—	—	—	0.5 - 5	—
9	—	—	—	—	—	5 - 10	—
X	—	—	—	> 10	—	> 10	> 10

StarlettePlus-E Refrigeration Dryers

SPS 010 - 250

Untreated compressed air is wet. 100% saturated as it leaves the compressor aftercooler, water vapor in the compressed air cools as it enters the air receiver and distribution piping, resulting in the formation of condensed liquid water and water aerosols. Wet compressed air leads to corrosion, the growth of micro-organisms and the formation of oily, acidic compressor condensate.

For a manufacturing facility reliant on compressed air for automation, these contaminants can directly impact safety, productivity and efficiency.

Compressed air treatment is therefore essential and for non-critical uses of compressed air, the refrigeration dryer is an ideal choice.

Refrigeration dryers

Refrigeration dryers use a closed loop cooling system to lower the temperature of the compressed air to just above freezing, causing condensation of water vapor.

Most of the condensed liquid is then removed by an integral water separator and drained away. Prior to leaving the dryer, the compressed air is re-heated by the incoming compressed air to prevent condensation on the outside of the downstream distribution piping.

Refrigeration dryers should always be installed with general purpose and high efficiency coalescing filters and are an effective way to reduce water vapor, liquid water and water aerosols for general purpose compressed air applications.

Designed with environmentally friendly, low Global Warming Potential (GWP) refrigerant gas, R513A, Parker's SPS Series Refrigeration Dryers are the best choice for quality, performance and the environment.

Advantages

- The E-Pack heat exchanger is designed with a large air/air heat exchanger to pre-cool the incoming hot, saturated compressed air and therefore reduce energy consumption.
- The highly efficient E-Pack design results in a refrigeration circuit that uses a smaller volume of refrigerant than other comparable dryers and offers one of the lowest absorbed powers in the industry.
- The E-Pack design utilizes low pressure drop, cross flow heat exchangers to reduce operational costs.
- The E-pack heat exchanger includes a high efficiency stainless steel demister separator for liquid removal over all operating conditions.
- All models are equipped as standard with a digital controller that includes an indication of compressed air temperature, volt free alarm contact, service reminder and integral timed drain control.
- StarlettePlus-E models are listed by a NRTL for UL 1995.
- Optional Energy Saving (ES) models (SPE075 – SPE0250) saves energy by matching power consumption to compressed air demand. The ES models adjust to partial load conditions by allowing the refrigerant compressor to cycle off while continuing to cool the inlet air using a thermal mass stored in the E-Pack.

StarlettePlus-E Refrigeration Dryers

Product specifications

Product Selection

Series		Model		Condenser Type		Power Supply		Max Pressure		Accessories		ID	
SPS	StarlettePlus-E	**[*]**	*Select model 010 through 0250	**-A**	Air Cooled	**115160**	115V/1Ph/60Hz	**14**	203 psig (14 barg)	**TIU**	Integral Timer Drain & Power Cord	**-BAL**	Balston
						230160	230V/1Ph/60Hz	**16**	232 psig (16 barg)				

Example: SPS025-A11516016TIU-BAL

Flow Rates

Dryer Model	Pipe Size	Inlet Flow Rate				kW
		cfm	m^3/min	m^3/hr	L/s	
SPS 010	1/2"	10	0.28	17.0	4.7	0.16
SPS 015	1/2"	15	0.42	25.5	7.1	0.17
SPS 025	1/2"	25	0.71	42.5	11.8	0.19
SPS 035	3/4"	35	0.99	59.5	16.5	0.18
SPS 050	3/4"	50	1.42	85.0	23.6	0.20
SPS 075	1”	75	2.12	127.4	35.4	0.36
SPS 0100	1”	100	2.83	169.9	47.2	0.37
SPS 0125	1”	125	3.54	212.4	59.0	0.38
SPS 0150	1 1/2"	150	4.25	254.9	70.8	0.56
SPS 0175	1 1/2"	175	4.96	297.3	82.6	0.69
SPS 0200	1 1/2"	200	5.66	339.8	94.4	0.90
SPS 0250	1 1/2"	250	7.08	424.8	118.0	0.91

Stated flows are for operation at the following climatic conditions: 100°F (38°C) Ambient Temperature, 100°F (38°C) Inlet Temperature and 100 psig (7 barg) Inlet Pressure.

For flows at other conditions, apply the correction factors shown below.

Controller Functions

Dryer Model	Power On Indication	Visual Fault Indication	Compressed Air Temp.	EST Energy Saving Technology	Dryer Service Indicator	Fault Relay: Power Loss	4-20mA for Dewpoint Retransmission
SPS 010 - 250	X	X	X		X	X	
SPS 075 - 250 w/ EST Option	X	X	X	X	X	X	X

StarlettePlus-E Refrigeration Dryers

Product specifications

Product Selection and Correction Factors

For correct operation, compressed air dryers must be sized using for the maximum inlet temperature, maximum ambient temperature, minimum inlet pressure and maximum flow rate of the installation. To select a dryer, first calculate the MDC (Minimum Drying Capacity) using the formula below then select a dryer from the flow rate table above with a flow rate equal to or above the MDC.
Note: **Minimum Drying Capacity = System Flow x CFIT x CFAT x CFMIP.**

CFIT - Correction Factor Minimum Inlet Temperature

Minimum Inlet Temperature	°F	90	95	100	110	120	130	140	149
	°C	32	35	38	43	49	54	60	65
Correction Factor		0.74	0.82	1	1.33	1.76	2.38	2.60	2.67

CFAT - Correction Factor Maximum Ambient Temperature

Max. Ambient Temperature	°F	60	70	80	90	95	100	110	120	122
	°C	16	21	27	32	35	38	43	49	50
Correction Factor		0.93	0.93	0.93	0.93	0.96	1	1.08	1.16	1.18

CFMIP - Correction Factor Minimum Inlet Pressure

Min. Inlet Pressure	psi g	45	60	80	100	125	150	160	175	203	232
	bar g	3	4	5.5	7	8.5	10	11	12	14	16
Correction Factor		1.40	1.17	1.09	1	0.88	0.82	0.81	0.79	0.75	0.71

Recommended Filtration

Dryer Model	Pipe Size (NPT)	Recommended Pre Filter
SPS 010	½"	2004N-1B1-DX
SPS 015	½"	2004N-1B1-DX
SPS 025	½"	2004N-1B1-DX
SPS 035	¾"	2206N-1B1-DX
SPS 050	¾"	2206N-1B1-DX
SPS 075	1”	2208N-1B1-DX
SPS 0100	1”	2208N-1B1-DX
SPS 0125	1”	2208N-1B1-DX
SPS 0150	1 ½"	2312N-1B1-DX
SPS 0175	1 ½"	2312N-1B1-DX
SPS 0200	1 ½"	2312N-1B1-DX
SPS 0250	1 ½"	2312N-1B1-DX

Filtration Performance	Pre-filter
Filtration Grade	DX
Filtration Type	Coalescing
Particle Reduction (inc water & oil aerosols)	Down to 0.01 micron
Filtration Efficiency	93%

Quality Assurance, IP Rating and Pressure Vessel Approvals

Development / Manufacture	ISO 9001 / ISO 14001
Ingress Protection Rating	IP22 Indoor Use Only
For use with compressed air only	

Weights and Dimensions

Dryer Model	Pipe Size	Dimensions						Weight	
		Height in/mm		Width in/mm		Depth in/mm		lbs/kg	
SPS 010	½"	20.5	520	11.8	300	15.7	400	53	24
SPS 015	½"	20.5	520	11.8	300	15.7	400	53	24
SPS 025	½”	20.5	520	11.8	300	15.7	400	55	25
SPS 035	¾"	22.8	580	13.0	330	21.7	550	77	35
SPS 050	¾”	22.8	580	13.0	330	21.7	550	79	36
SPS 075	1”	25.6	650	15.7	400	24.8	630	101	46
SPS 0100	1”	25.6	650	15.7	400	24.8	630	101	46
SPS 0125	1”	25.6	650	15.7	400	24.8	630	104	47
SPS 0150	1 ½"	25.6	650	15.7	400	24.8	630	117	53
SPS 0175	1 ½"	25.6	650	15.7	400	24.8	630	121	55
SPS 0200	1 ½"	33.1	840	17.7	450	30.7	780	176	80
SPS 0250	1 ½”	33.1	840	17.7	450	30.7	780	176	80

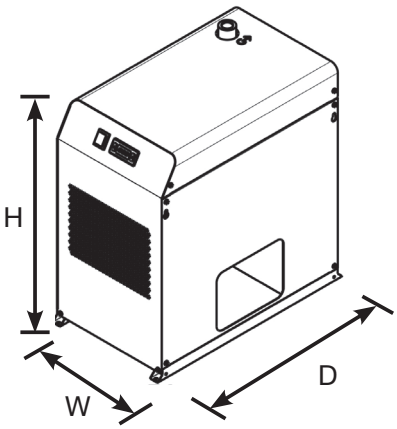

ecodry K-MT 1-4

Efficient compressed air adsorption dryers

Adsorption dryers

Whether a compressed air user wants to control the growth of micro-organisms (essential for direct and in-direct contact applications in the food, beverage & pharmaceutical industries), ensure air used for critical applications / instrumentation is free from water contamination or has external piping where low ambient temperature can cause condensation, adsorption dryers are the go to dryer technology

There are many different adsorption dryer technologies available and while they all reduce water from the compressed air in the same way, they differ in the way they regenerate the desiccant material.

Heatless regeneration

The simplest and most common method used to regenerate the adsorbent desiccant material is the 'heatless' method (so called as it does not use heat for desiccant regeneration).

Using a proportion of the clean, dry process air for regeneration, heatless dryers typically have the lowest capital costs of all adsorption dryer types (due to the simplicity of the heatless design).

Being very robust and having fewer components, they typically have the lowest maintenance cost of all the adsorption technologies.

Heatless dryers are available to suit all compressed air flow rates from small to large, whereas the more complicated regeneration methods are often only available for higher flow rates due to cost and complexity of the designs.

Advantages

- Deliver a constant outlet dewpoint in accordance with ISO8573-1 classes 1, 2 or 3 for water vapor.
- Provide an outlet dewpoint which inhibits the growth of micro-organisms (allowing their efficient reduction using filtration).
- Use clean, dry purge air for regeneration, eliminating any risk of damage to the adsorption bed or re-contamination of the downstream compressed air.
- No heat is used for regeneration; therefore, no insulation is required and loss of dewpoint on column changeover due to inefficient cool down is eliminated.
- Include Parker OIL-X High Efficiency Coalescing filtration and General Purpose Dry Particulate post filtration as standard.
- Fitted with Parker Multitronic electronic control with the option of dewpoint display and dewpoint switching Energy Saving Technology.

ecodry K-MT 1-4

Product specifications

Product Selection

Series		Model		Nominal Pressure		Generation		Connection		Voltage		Controls		ID	
SPE	K-MT	**[*]**	*Select model 1 through 4	**/16**	232 psig (16 barg)	**D3**	3rd Gen	**-N**	NPT	**115**	115V - 1Ph 60Hz	**M**	Multitronic	**-BAL**	Balston

Dryer Performance

Dryer Model	Dewpoint (Standard)		ISO8573-1:2010 Classification (Standard)	Dewpoint (Option 1)		ISO8573-1:2010 Classification (Option 1)	Dewpoint (Option 2)		ISO8573-1:2010 Classification (Option 2)
	°C	°F		°C	°F		°C	°F	
K-MT1-4	-40	-40	Class 2.2.2	-70	-100	Class 2.1.2	-20	-4	Class 2.3.2

ISO8573-1 Classifications when used with Parker domnick hunter OIL-X pre / post filtration

Technical Data

Dryer Model	Minimum Operating Pressire		Maximum Operating Pressure		Minimum Operating Temperature		Maximum Operating Temperature		Maximum Ambient Temperature		Electrical Supply (Standard)	Filter Thread Connections (Standard)	Noise Level
	barg	psig	barg	psi	°C	°F	°C	°F	°C	°F			dB(A)
K-MT	5	73	15	218	5	41	50	122	50	122	115 1ph 50/60Hz	NPT	65-86

Flow Rates

Dryer Model	Pipe Size NPT (in)	Inlet Flow Rate			
		cfm	L/s	m³/min	m³/hr
K-MT 1	1/4	5	2	0.13	8
K-MT 2	1/4	9	4	0.25	15
K-MT 3	1/4	15	7	0.42	25
K-MT 4	1/4	21	10	0.58	35

Stated flows are for operation at 7 bar (g) (102 psi g) with reference to 20°C, 1 bar (a), 0% relative water vapor pressure. For flows at other pressures, apply the correction factors shown below.

Air Quality Classes, in Accordance with ISO 8573-1:2010

Particulate	Class 2
Humidity / gaseous	Class 2 and Class 1 (depending upon sizing and dew point setting)
Total oil contamination	Class 2

Materials of Construction

Filters	See product-specification regarding domnick hunter OIL-X filters
Pressure vessels	Aluminium
Valve blocks	Aluminium
Seals	NBR
Filling	100 % Molecular sieve

Pressure Vessel Approvals

EU	Approval for fluid group 2 in accordance with the Pressure Equipment Directive 97/23/EC. Product range K-MT1 to 2, in accordance with article 3, paragraph 3; product range K-MT3 to 4 in accordance with category I (module A).
USA	Approval to ASME VIII Div. 1 not required

ecodry K-MT 1-4

Product specifications

Dimensions (in) and Weight (lb)

Dryer Model	A	B	C	D	E	Weight
K-MT 1	12.8	15.7	8.5	14.8	4	25.4
K-MT 2	12.8	22.6	8.5	21.7	4	34.2
K-MT 3	12.8	32.5	8.5	31.5	4	44.1
K-MT 4	12.8	42.3	8.5	41.4	4	55.1

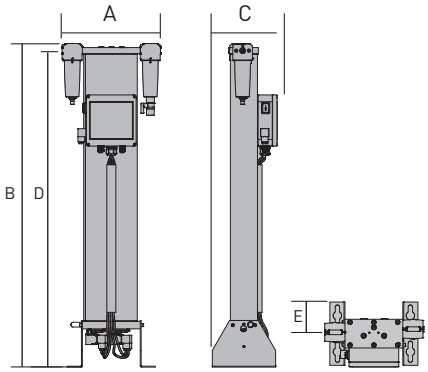

Quality Assurance

Development/Manufacture	DIN EN ISO 9001, DIN EN ISO 14001

Product Selection and Correction Factors

CFIT - Correction Factor Maximum Inlet Temperature

Maximum Inlet Temperature	°C	25	30	35	40	45	50
	°F	77	86	95	104	113	122
Correction Factor		0.94	0.95	1.00	1.15	1.22	1.28

CFAT - Correction Factor Maximum Ambient Temperature

Maximum Ambient Temperature	°C	25	30	35	40	45	50
	°F	77	86	95	104	113	122
Correction Factor		1.00	1.00	1.00	1.00	1.00	1.00

CFP - Correction Factor Minimum Inlet Pressure

Minimum Inlet Pressure	bar g	5	6	7	8	9	10	11	12	13	14	15
	psi g	73	87	100	116	131	145	160	174	189	203	218
Correction Factor		1.33	1.12	1.00	0.88	0.79	0.76	0.74	0.67	0.62	0.59	0.56

CFD - Correction Factor Dewpoint

Required Dewpoint	°C	-25	-40	-70
	°F	-13	-40	-100
Correction Factor		1.00	1.00	2.00

For correct operation, compressed air dryers must be sized using for the minimum pressure, maximum temperature and maximum flow rate of the installation. To select a dryer, first calculate the MDC (Minimum Drying Capacity) using the formula below then select a dryer from the flow rate table above with a flow rate equal to or above the MDC. Minimum Drying Capacity = System Flow x CFIT x CFAT x CFP x CFD.

ecodry K-MT 1-4

Product specifications

Product Catalog Numbers for Dryers and Filters

Dryer Model	Catalog Number	Inlet High Efficiency Filter (included)	Outlet Dust Filter (included)
K-MT 1	K1/16D3-N115M-BAL	AAPX010ANFX	AOPX010ANMX
K-MT 2	K2/16D3-N115M-BAL	AAPX010ANFX	AOPX010ANMX
K-MT 3	K3/16D3-N115M-BAL	AAPX010ANFX	AOPX010ANMX
K-MT 4	K4/16D3-N115M-BAL	AAPX010ANFX	AOPX010ANMX

Service Kits for Preventative Maintenance

Order No.	Suitability	Voltage	Interval	Scope of supply
SKK1-K4/D3/12-BAL	K-MT 1 - K-MT 4	115V & 230V	12/36 months	Reset module, silencer, and filter elements
SKK1-K4/D3/24-BAL	K-MT 1 - K-MT 4	115V & 230V	24 months	Reset module, wear part set for in-/outlet valves, silencer, and filter elements
SKK1-K4/D3/48/115-BAL	K-MT 1 - K-MT 4	115V	48 months	Reset module, wear part set for in-/outlet valves, solenoid coils, non-return valves, demister, perforated plate, perforated plate gaskets, silencer, and filter elements

DESPACs: Amount of required desiccant packs for each model - for preventative maintenance after 48 months

Order No.	K-MT 1	K-MT 2	K-MT 3	K-MT 4
DESPAC1MS-BAL	1		1	
DESPAC4MS-BAL		1	1	2

CDAS HL Clean Dry Air System

Compressed air treatment redefined

ENERGY SAVING TECHNOLOGY

Standard on all units, it automatically adapts dryer operation to the ambient inlet conditions and compressed air demand, resulting in reduced maintenance and significantly lower energy costs - often with savings of up to 85%.

- 'Power on' and fault indication
- Dryer and filter service indicators
- Dewpoint display
- Fault relay: power, dewpoint alarm and sensor failure
- 4-20mA dewpoint re-transmission

Combining sophisticated OIL-X filtration technology with an optimized drying system, the CDAS is designed to deliver consistent high performance over an extended period.
Air quality is third party validated to ISO 7183 and ISO 8573-1, so you can be completely confident of your compressed air quality.

Energy saving technology (EST) is standard on all units. It automatically adapts dryer operation to the ambient inlet conditions and compressed air demand, resulting in reduced maintenance and significantly lower energy costs - often with savings of up to 85%.

CDAS HL Clean Dry Air Systems provide clean, dry compressed air in accordance with all editions of ISO8573-1.

Advantages

- HMI display screen - large screen display offers real-time information.
- High strength desiccant - cartridges are snowstorm filled and include a 5-year lifetime, for consistent drying, regeneration and dewpoint.
- Pre-mounted filters - engineered to provide validated ISO 8573-1 performance.
- Threaded top end-cap - enables the straightforward replacement of the desiccant cartridge.
- Purge setting - purge air can be set at minimum operating pressure without the need for specialist tools.
- Corrosion protected column - with a 10-year guarantee, to ensure a long operational life.
- Full bore internal flow paths - featuring optimized flow management for reduced pressure drop.
- Full bore cylinder valve system - low pressure loss valves provide full air flow and minimal back pressure, while robust cylinders extend service intervals.
- Base plate - designed for pallet trucks, allowing for easy, time-saving installation.
- UL Listed.

CDAS HL Clean Dry Air System

Product specifications

Product Selection

Series	Regeneration Type		Model	Dewpoint[1]		Connection		Maximum Pressure		Power Supply[2]		Controller[3]		ID	
CDAS	HL	Heatless	050	-40	-20°C (-4°F) -40°C (-40°F)	N	NPT	16	16 barg (232 psig)	A	AC	E	EST	-BAL	Balston
			055							D	DC				
			060	-70	-70°C (-100°F)										
			065												
			070												
			075												
			080												
			085												

Notes:

Example: CDASHL065-40N16AE-BAL

[1]For -20°C (-4°F) dewpoint, order -40°C (-40°F) model and follow the USER GUIDE instructions.

[2]AC-85 - 265v 1ph 50/60Hz. DC-24v direct connection.

[3]EST = Energy Savings Technology - Included as standard on all CDAS Models.

Flow Rates

Stated flows are for operation at 102 psi g (7 bar (g)) with reference to 68°F (20°C), 14.5 psi (1bar(a)), 0% relative water vapor pressure.

Inlet Flow Rate at Pressure Dewpoint										
Dryer Models	Connection (NPT)	-20°C (-4°F)			-40°C (-40°F)			-70°C (-100°F)		
		cfm	m³/hr	L/s	cfm	m³/hr	L/s	cfm	m³/hr	L/s
CDAS HL 050	1/2”	35	60	16	32	55	15	16	27	8
CDAS HL 055	1/2”	46	76	21	42	70	19	21	35	10
CDAS HL 060	1/2”	58	98	27	53	90	25	27	45	13
CDAS HL 065	1/2”	71	120	34	65	110	31	33	55	16
CDAS HL 070	3/4”	97	164	46	88	150	42	44	75	21
CDAS HL 075	1”	120	203	56	109	185	51	55	92	26
CDAS HL 080	1”	142	241	67	129	220	61	65	110	31
CDAS HL 085	1 1/2”	195	329	91	177	300	83	89	150	42

Product Selection and Correction Factors

For correct operation, compressed air dryers must be sized using for the minimum pressure, maximum temperature and maximum flow rate of the installation. To select a dryer, first calculate the MDC (Minimum Drying Capacity) using the formula below then select a dryer from the flow rate table above with a flow rate equal to or above the MDC. Minimum Drying Capacity = System Flow x CFIT x CFAT x CFP.

CFIT - Correction Factor Maximum Inlet Temperature

Maximum Inlet Temperature	°F	77	86	95	104	113	122
	°C	25	30	35	40	45	50
Correction Factor		1.00	1.00	1.00	1.04	1.14	1.37

CFAT - Correction Factor Maximum Ambient Temperature

Maximum Ambient Temperature	°F	77	86	95	104	113	122
	°C	25	30	35	40	45	50
Correction Factor		1.00	1.00	1.00	1.00	1.00	1.00

CDAS HL Clean Dry Air System

Product specifications

CFP - Correction Factor Minimum Inlet Pressure

Minimum Inlet Pressure	psi g	58	73	87	100	116	131	145	160	174	189	203	218	232
	bar g	4	5	6	7	8	9	10	11	12	13	14	15	16
Correction Factor		1.60	1.33	1.14	1.00	0.89	0.80	0.73	0.67	0.62	0.57	0.53	0.50	0.47

Technical Data

Dryer Model	Minimum Operating Pressure		Maximum Operating Pressure		Minimum Operating Temperature		Maximum Operating Temperature		Maximum Ambient Temperature		Electrical Supply (Standard)	Electrical Supply (Optional)	Filter Thread Connections	Noise Level
	psig	barg	psig	barg	°F	°C	°F	°C	°F	°C				dB(A)
CDAS HL 50-85	58	4	232	16	41	5	122	50	131	55	85-265V 1ph 50/60Hz	24VDC	NPT	<75

OIL-X Pre-Mounted Filters

Filtration Position	Inlet	Inlet	Outlet
Filtration Grade	Grade AO	Grade AA	Grade AO
Filtration Type	Coalescing	Coalescing	Dry Particulate
Particle Removal (inc water & oil aerosols)	Down to 1 micron	Down to 0.01 micron	Down to 1 micron
Maximum Remaining Oil Content at 21°C	0.5 mg/m³ (0.5 ppm(w))	0.01 mg/m³ (0.01 ppm(w))	N/A
Filtration Efficiency	99.925%	99.9999%	99.925%

Weight and Dimensions

Model	Port Connection Inlet / Outlet	Dimensions						Weight		Inlet		Outlet
		Height (H)		Width (W)		Depth (D)				General Purpose Coalescing Filter	High Efficiency Coalescing Filter	General Purpose Dry Particulate Filter
		in	mm	in	mm	in	mm	lbs	kg			
CDAS HL 50	½”	45	1133	22	559	19	490	168	76	AOPX015C	AAPX015C	AOPX015C
CDAS HL 55	½”	52	1313	22	559	19	490	185	84	AOPX015C	AAPX015C	AOPX015C
CDAS HL 60	½”	59	1510	22	559	19	490	205	93	AOPX020C	AAPX020C	AOPX020C
CDAS HL 65	½”	65	1660	22	559	19	490	220	100	AOXP020C	AAPX020C	AOPX020C
CDAS HL 70	¾”	80	2020	22	559	19	490	265	120	AOPX025D	AAPX025D	AOPX025D
CDAS HL 75	1”	63	1595	22	559	27	682	364	165	AOPX025E	AAPX025E	AOPX025E
CDAS HL 80	1”	69	1745	22	559	27	682	397	180	AOPX025E	AAPX025E	AOPX025E
CDAS HL 85	1 ½”	83	2105	22	559	27	682	463	210	AOPX030G	AAPX030G	AOPX030G

Pressure Vessel Approvals

Developed and Manufactured to DIN EN ISO 9001, DIN EN ISO 14001 and IP65.
Pressure vessel approved for fluid group 2 in accordance with the Pressure Equipment Directive 97/23/EC and AS1210.
Approval to ASME VIII Div. 1 not required. For use with Compressed Air and Gaseous Nitrogen.

*Parker has a continuous policy of product development and although the company reserves the right to changes specifications, it attempts to keep customers informed of any alterations.

OFAS HL Oil Free Air System

Compressed air treatment redefined

ISO 8573-1

CLASS 0 AIR

The OFAS is third party validated by Lloyds register to provide ISO 8573-1 Class 0, with respect to total oil from both oil lubricated and oil free compressors, ensuring the highest quality air at the point of use for critical applications.

Combining sophisticated OIL-X filtration technology with an optimized drying system, the OFAS Oil Free Air System is designed to deliver consistent high performance over an extended period.

Air quality is third party validated to ISO 7183 and ISO 8573-1 and also offers class 0 for total oil, so you can be completely confident of your compressed air quality.

Advantages

- Energy saving technology - standard on all units, it automatically adapts dryer operation to the ambient inlet conditions and compressed air demand.
- High strength desiccant - cartridges are snowstorm filled and include a 5-year lifetime, for consistent drying, regeneration and dewpoint.
- Pre-mounted OIL-X filters provide validated ISO 8573-1 performance.
- Threaded top end-cap - enables the straightforward replacement of the desiccant cartridge.
- Purge setting - purge air can be set at minimum operating pressure without the need for specialist tools.
- Corrosion protected column - with a 10-year guarantee, to ensure a long operational life.
- Full bore internal flow paths - featuring optimized flow management for reduced pressure drop.
- Full bore cylinder valve system - low pressure loss valves provide full air flow and minimal back pressure, while robust cylinders extend service intervals.
- Base plate - designed for pallet trucks, allowing for easy, time-saving installation.
- UL Listed.

The OFAS is third party validated by Lloyds register to provide ISO 8573-1 Class 0, with respect to total oil from both oil lubricated and oil free compressors, ensuring the highest quality air at the point of use for critical applications.

OFAS HL Oil Free Air System

Product specifications

Product Selection

Series	Regeneration Type		Model	Dewpoint[1]		Connection		Maximum Pressure		Power Supply[2]		Controller[3]		ID	
OFAS	HL	Heatless	050	-40	-20°C (-4°F) -40°C (-40°F)	N	NPT	16	16 barg (232 psig)	A	AC	E	EST	-BAL	Balston
			055							D	DC				
			060	-70	-70°C (-100°F)										
			065												
			070												
			075												
			080												
			085												

Notes:

Example: OFASHL065-40N16AE-BAL

[1]For -20°C (-4°F) dewpoint, order -40°C (-40°F) model and follow the USER GUIDE instructions.

[2]AC-85 - 265v 1ph 50/60Hz. DC-24v direct connection.

[3]EST = Energy Savings Technology - Included as standard on all OFAS Models.

Flow Rates

Stated flows are for operation at 102 psi g (7 bar (g)) with reference to 68°F (20°C), 14.5 psi (1bar(a)), 0% relative water vapor pressure.

Inlet Flow Rate at Pressure Dewpoint										
Dryer Models	Connection (NPT)	-20°C (-4°F)			-40°C (-40°F)			-70°C (-100°F)		
		cfm	m³/hr	L/s	cfm	m³/hr	L/s	cfm	m³/hr	L/s
OFAS HL 050	1/2”	35	60	16	32	55	15	16	27	8
OFAS HL 055	1/2”	46	76	21	42	70	19	21	35	10
OFAS HL 060	1/2”	58	98	27	53	90	25	27	45	13
OFAS HL 065	1/2”	71	120	34	65	110	31	33	55	16
OFAS HL 070	3/4”	97	164	46	88	150	42	44	75	21
OFAS HL 075	1”	120	203	56	109	185	51	55	92	26
OFAS HL 080	1”	142	241	67	129	220	61	65	110	31
OFAS HL 085	1 1/2”	195	329	91	177	300	83	89	150	42

Product Selection and Correction Factors

For correct operation, compressed air dryers must be sized using for the minimum pressure, maximum temperature and maximum flow rate of the installation. To select a dryer, first calculate the MDC (Minimum Drying Capacity) using the formula below then select a dryer from the flow rate table above with a flow rate equal to or above the MDC. Minimum Drying Capacity = System Flow x CFIT x CFAT x CFP..

CFIT - Correction Factor Maximum Inlet Temperature

Maximum Inlet Temperature	°F	77	86	95	104	113	122
	°C	25	30	35	40	45	50
Correction Factor		1.00	1.00	1.00	1.04	1.14	1.37

CFAT - Correction Factor Maximum Ambient Temperature

Maximum Ambient Temperature	°F	77	86	95	104	113	122
	°C	25	30	35	40	45	50
Correction Factor		1.00	1.00	1.00	1.00	1.00	1.00

OFAS HL Oil Free Air System

Product specifications

CFP - Correction Factor Minimum Inlet Pressure

Minimum Inlet Pressure	psi g	58	73	87	100	116	131	145	160	174	189	203	218	232
	bar g	4	5	6	7	8	9	10	11	12	13	14	15	16
Correction Factor		1.60	1.33	1.14	1.00	0.89	0.80	0.73	0.67	0.62	0.57	0.53	0.50	0.47

Technical Data

Dryer Model	Minimum Operating Pressure		Maximum Operating Pressure		Minimum Operating Temperature		Maximum Operating Temperature		Maximum Ambient Temperature		Electrical Supply (Standard)	Electrical Supply (Optional)	Filter Thread Connections	Noise Level
	psig	barg	psig	barg	°F	°C	°F	°C	°F	°C				dB(A)
OFAS HL 50-85	58	4	232	16	41	5	122	50	131	55	85-265V 1ph 50/60Hz	24VDC	NPT	<75

OIL-X Pre-Mounted Filters

Filtration Position	Inlet	Inlet	Outlet	Outlet
Filtration Grade	Grade AO	Grade AA	OVR	Grade AO
Filtration Type	Coalescing	Coalescing	Oil Vapor Removal	Dry Particulate
Particle Removal (inc water & oil aerosols)	Down to 1 micron	Down to 0.01 micron	N/A	Down to 1 micron
Maximum Remaining Oil Content at 21°C	0.5 mg/m^3 (0.5 ppm(w))	0.01 mg/m^3 (0.01 ppm(w))	0.0003 mg/m3 at system temp. [0.003 ppm (w)] at system temp.	N/A
Filtration Efficiency	99.925%	99.9999%	N/A	99.925%

Weight and Dimensions

Model	Port Connection Inlet / Outlet	Dimensions						Weight		Inlet		Outlet
		Height (H)		Width (W)		Depth (D)				General Purpose Coalescing Filter	High Efficiency Coalescing Filter	General Purpose Dry Particulate Filter
		in	mm	in	mm	in	mm	lbs	kg			
OFAS HL 50	½”	45	1133	22	559	20.2	512	198	90	AOPX015C	AAPX015C	AOPX015C
OFAS HL 55	½”	52	1313	22	559	20.2	512	214	97	AOPX015C	AAPX015C	AOPX015C
OFAS HL 60	½”	59	1510	22	559	19.5	496	234	106	AOPX020C	AAPX020C	AOPX020C
OFAS HL 65	½”	65	1660	22	559	19.5	496	247	112	AOXP020C	AAPX020C	AOPX020C
OFAS HL 70	¾”	80	2020	22	559	19	496	291	132	AOPX025D	AAPX025D	AOPX025D
OFAS HL 75	1”	63	1595	22	559	27	682	406	184	AOPX025E	AAPX025E	AOPX025E
OFAS HL 80	1”	69	1745	22	559	27	682	432	196	AOPX025E	AAPX025E	AOPX025E
OFAS HL 85	1 ½”	83	2105	22	559	27	682	511	232	AOPX030G	AAPX030G	AOPX030G

Pressure Vessel Approvals

Developed and Manufactured to DIN EN ISO 9001, DIN EN ISO 14001 and IP65.
Pressure vessel approved for fluid group 2 in accordance with the Pressure Equipment Directive 97/23/EC and AS1210.
Approval to ASME VIII Div. 1 not required. For use with Compressed Air and Gaseous Nitrogen.

*Parker has a continuous policy of product development and although the company reserves the right to changes specifications, it attempts to keep customers informed of any alterations.

Parker Filtration Group

Aerospace Filtration Division
Greensboro, North Carolina
336 668 4444

Bioscience & Water Filtration Division
Bioscience Filtration
Oxnard, California
877 784 2234

Water Purification
Carson, California
310 608 5600

Engine Mobile Aftermarket Division
Kearney, Nebraska
308 234 1951

Engine Mobile Original Equipment Division
Modesto, California
209 521 7860

HVAC Filtration Division
Jeffersonville, Indiana
866 247 4827

Hydraulic & Fuel Filtration Division
Metamora, Ohio
419 644 4311

Industrial Gas Filtration & Generation Division
Lancaster, NY
800 343 4048

Industrial Process Filtration Division
Mineral Wells, Texas
940 325 2575

Bioscience Engineering Filtration Division EMEA
Birtley, United Kingdom
+44 (0) 191 410 5121

Engine Mobile Filtration Division EMEA
Dewsbury, United Kingdom
+44 (0) 1924 487 037

Gas Separation & Filtration Division EMEA
Team Valley, United Kingdom
+44 (0) 191 402 9000

Gas Turbine Filtration Division
Alton, United Kingdom
+44 (0) 1420 541188

Hydraulic & Industrial Filtration Division EMEA
Arnhem, Netherlands
+31 (0) 26 376 0376

Australia Filtration Division
Castle Hill, Australia
+61 2 9634 7777

China Filtration Division
Shanghai, China
+86 21 2067 2067

India Filtration Division
Chennai, India
+91 22 4391 0700

Korea Filtration Division
Hwaseon City, Korea
+82 31 359 0852

Latin America Filtration Division
Sao Paulo, Brazil
+55 12 4009 3500

© 2023 Parker Hannifin Corporation

BRO_PKR _Low Flow Dryer_052023

Parker Hannifin Corporation
Industrial Gas Filtration and Generation Division
4087 Walden Ave.
Lancaster, NY 14086
phone +1 (800) 343-4048
www.parker.com/igfg